Receiving System

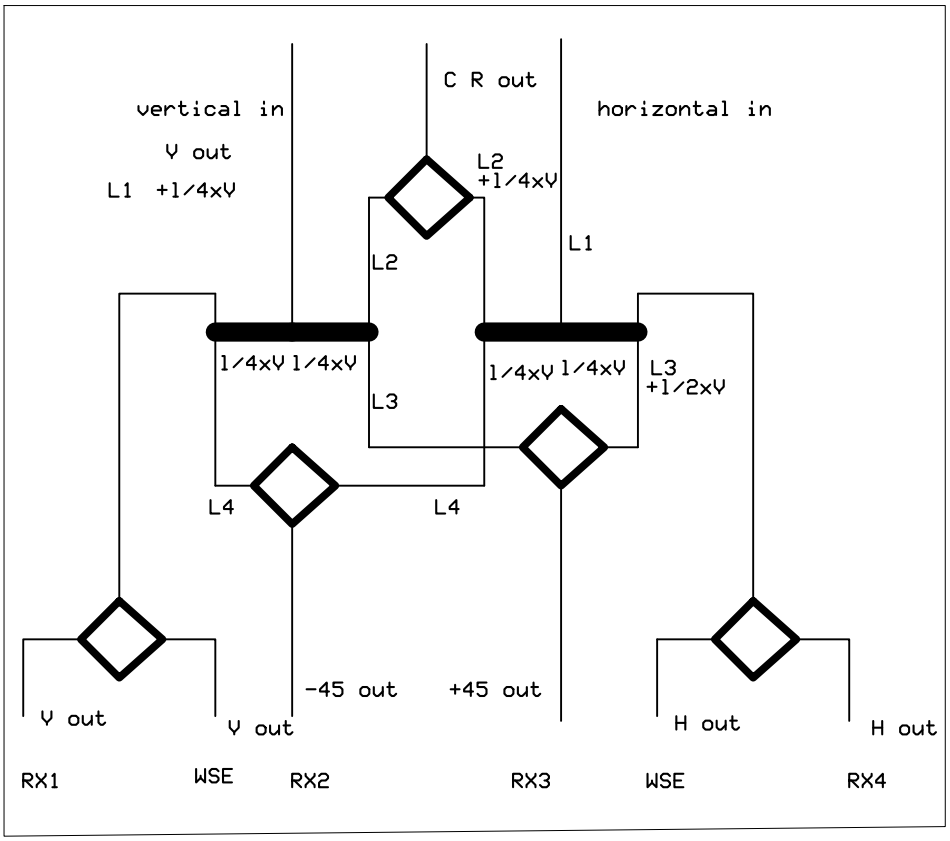

Lambda /4 transformer

Hybrid Coupler/Splitter

C R Circular Right Perseus and RX5